Lewis Carroll Squares 1

Draw the figure shown below. You may start at any intersection. You cannot cross over a line you have drawn. You cannot retrace a part of a line you have already drawn or pick you pencil off the paper. Your line will touch a line you have already drawn at the intersections.

Put the number 1 at the intersection you started at. Use additional numbers at each intersection to help show the pathway your pencil traveled. Redraw the puzzle on separate paper if you need another copy.

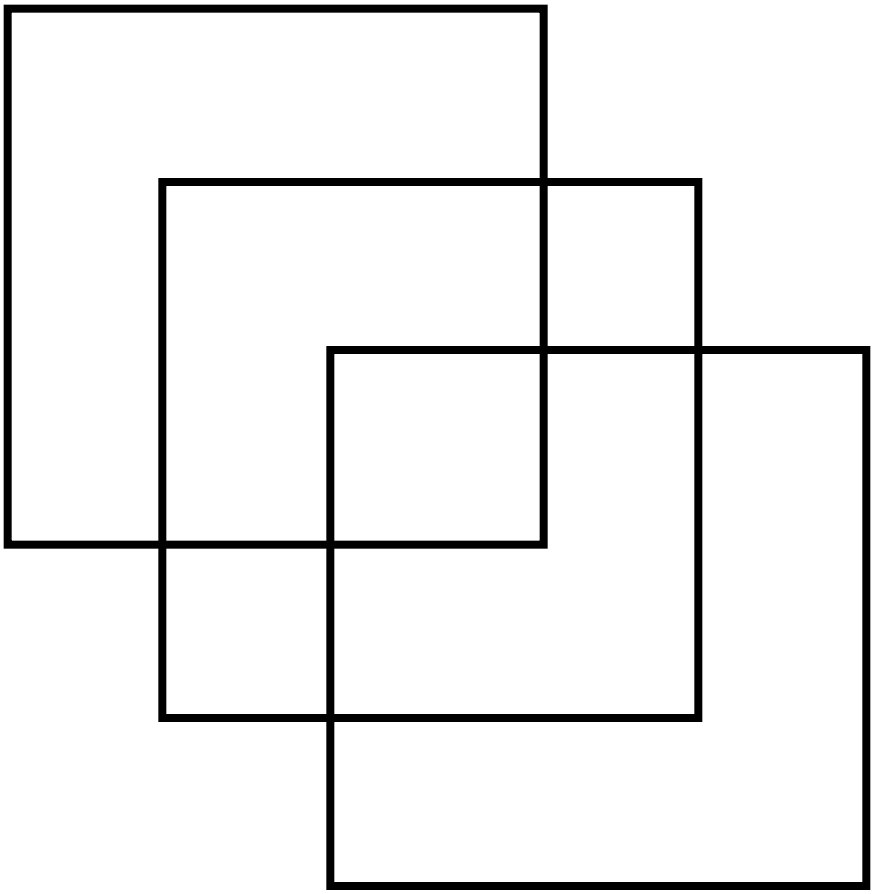

Solution 1A

There are many possible solutions

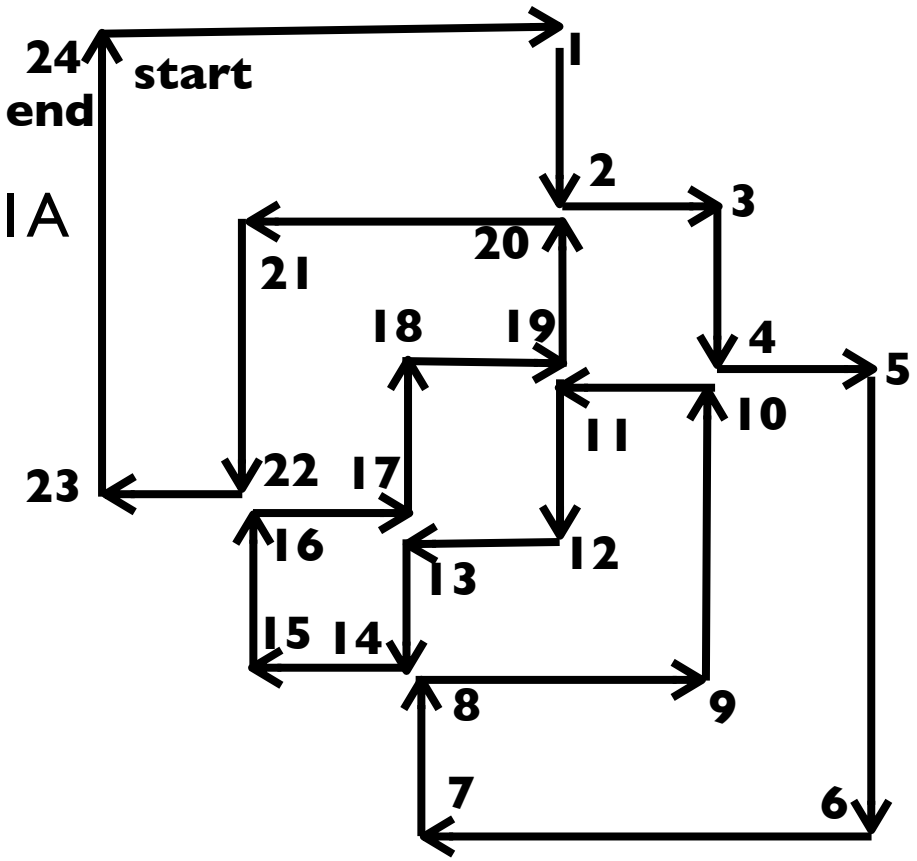

Solution 1B

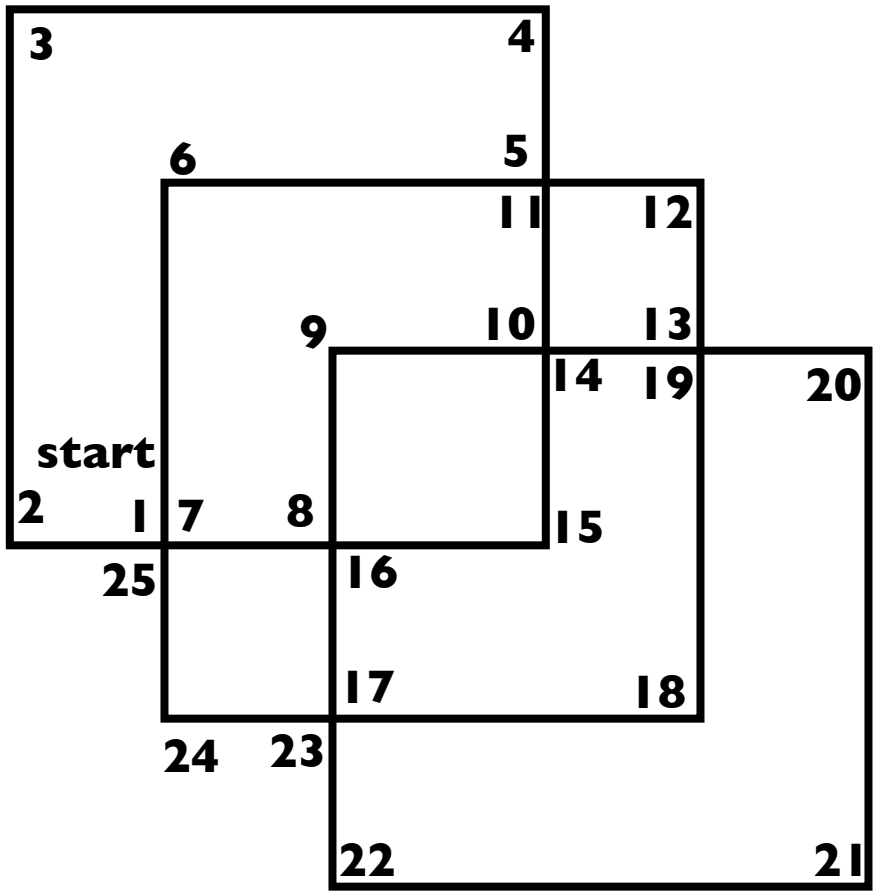

Solution 1C

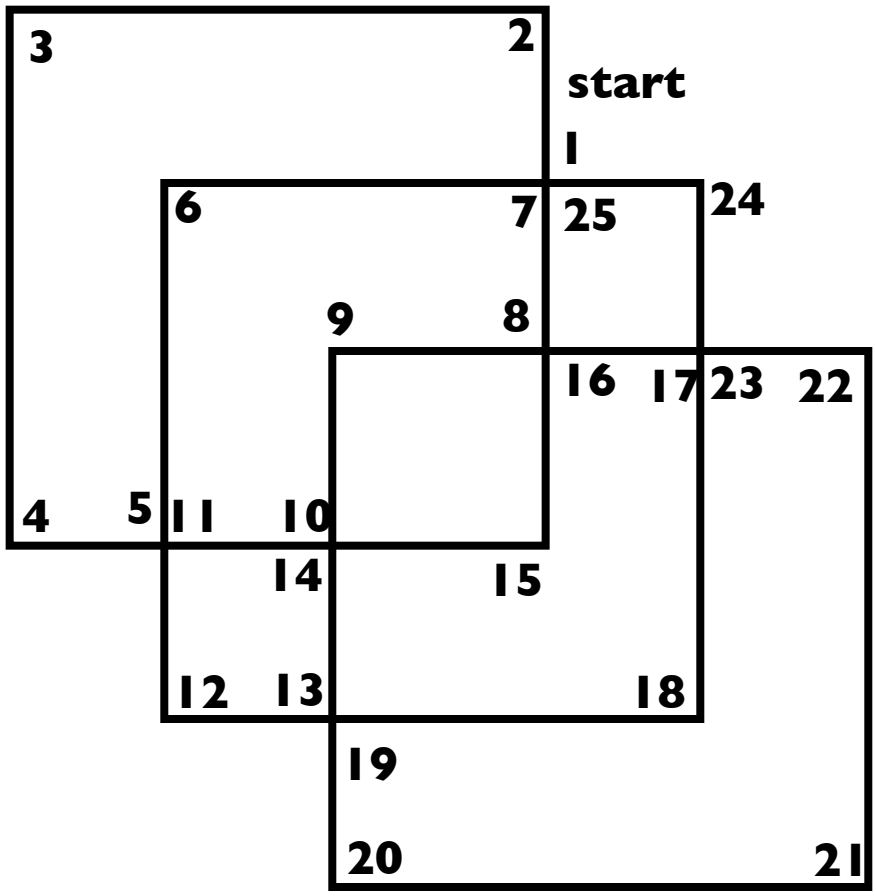

The Theoretical Solution

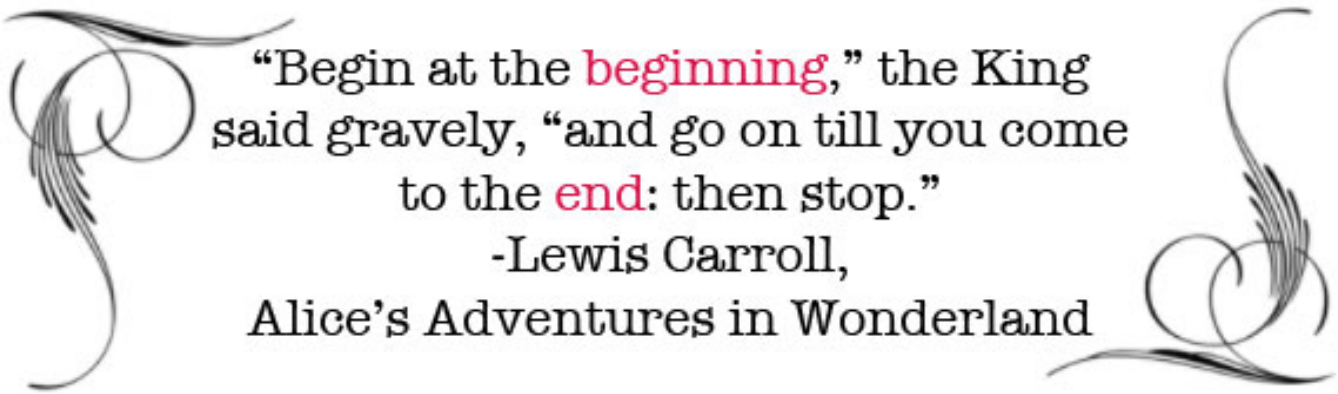

Lewis Carroll Squares 2

Draw the figure shown below. You may start at any intersection. You cannot cross over a line you have drawn. You cannot retrace a part of a line you have already drawn or pick you pencil off the paper. Your line will touch a line you have already drawn at the intersections.

Put the number 1 at the intersection you started at. Use additional numbers at each intersection to help show the pathway your pencil traveled. Redraw the puzzle on separate paper if you need another copy.

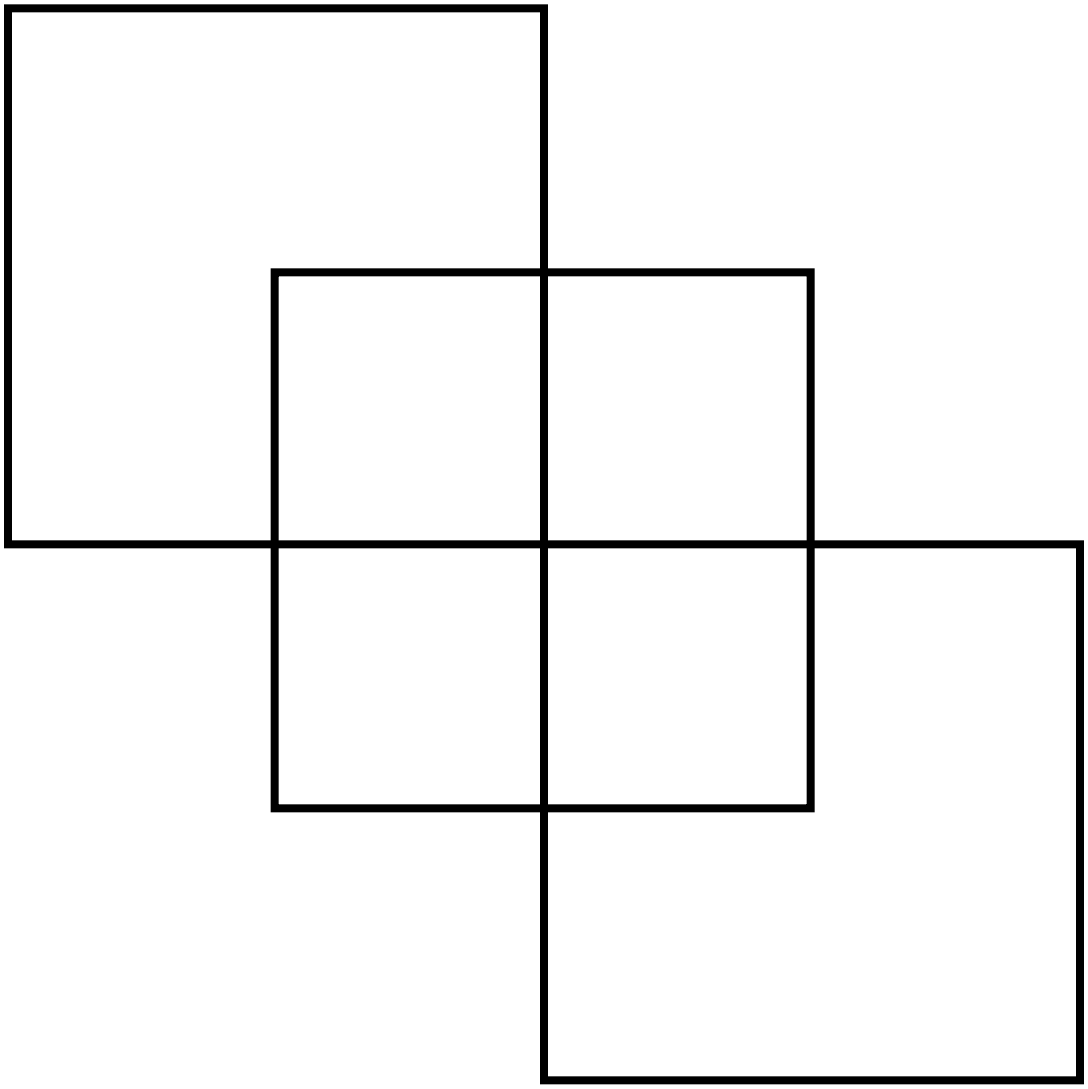

Solution 2A

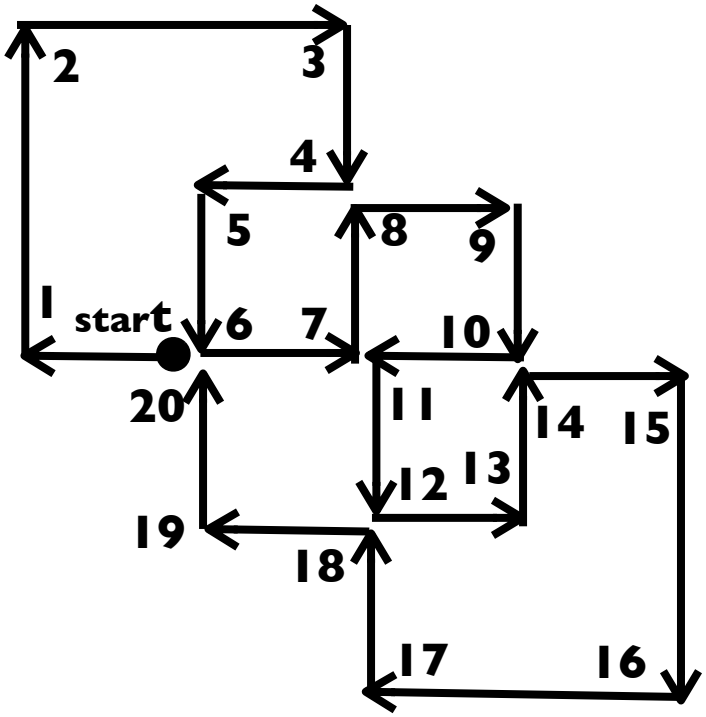

Note:

Not every teacher sees the value in network or pathway puzzles. With so much to teach something has to go. I believe that at least a few of these type of puzzles should be presented during grades 3 through 6. The students benefit form seeing how the solutions are drawn. The start of technical drawing begins with trying to present a series of steps in a drawing.

Compare Solution 1A with Solution 1B.

Solution 1A draws the path with separate arrows. The intersections on the path do not quite touch in places where the pats intersect so the path is easier to follow. The numbered intersections are nice but the way the arrows work is really helpful. To draw these type of solutions you need to start with your own blank paper and draw the figure step by step. You need to select scale and direction on your own.

Solution 1B uses the actual drawing of the puzzle and just adds the numbered intersections. It is clean, neat and clear to someone used to looking at these type of drawings.. The pathway around the puzzle is not as clear as it is in solution 1A with the separate lines with directional arrows. arrows. You do not need to select scale on your own.

Students need to see different technical drawings and discuss the benefits of each type.

Find other solutions that use “different pathways”

A second discussion about the many different solutions is also valuable. Once you have a pathway any other starting point on tat same pathway will be a “copy” of that same solution. A different solution form the first would require a different pathway not just a different starting point. Not all students will see the same pathway. A discussion of which pathway makes the best looking and easy to read solution would be a great way to compare and contrast solutions.

Network Theory

Network or pathway problems are an important concept in computer science, logistics and biology.

The World Wide Web is a complicated pathway of connections between computers servers and storage devices. Network engineers study how to optimize the movement, transfer and storage along these numerous pathways.

The shortest path, the fastest path and the path that uses the least fuel are all problems that FED EX and other delivery companies deal with as they move material around the world. The study of logistics is now a master program at many colleges.

Biology has several areas that are concerned with network and pathway problems. Brain specialist study the neural networks in the brain, Neurology is the study of the the nervous system. The nervous system a network of fibers and cells that help control how the human body functions.

Charles Lutwidge Dodgson

Charles Lutwidge Dodgson (1832 1898), better known by his pen name , **Lewis Carroll** was an English writer, mathematician , and logician. His most famous writings are *Alice's Adventures in Wonderland* and its sequel *Through the Looking-Glass*, as well as the poem "Jabberwocky", all examples of the genre of literary nonsense.

Mathematical Work.

Dodgson worked primarily in the fields of geometry, mathematical logic and recreational mathematics, producing nearly a dozen books under his real name. Dodgson also developed new ideas in linear algebra and probability. He worked as the Mathematical Lecturer at Christ Church. His mathematical work attracted renewed interest in the late 20th century. Martin Gardner's book on logic machines and diagrams. William Bartley's publication Carroll's symbolic logic book have sparked a reevaluation of Carroll's contributions to symbolic logic.

The Logic Diagrams Of Lewis Carroll

Prime	Not prime
2, 3, 5, 7, 11, 13, 17, 19, 23, 29, 31, 37, 41, 43, 47, 53	1, 4, 6, 8, 9, 10, 12, 14, 15, 16, 18, 20, 21, 22, 24, 25

	Prime	Not prime
Even	2	4, 6, 8, 10, 12, 14, 16, 18, 20, 22, 24, 26
Not even	3, 5, 7, 11, 13, 17, 19, 23, 29, 31, 37, 41	1, 9, 15, 21, 25, 27, 33, 35, 39, 41, 45, 49

Like John Venn, Carroll was interested in using diagrams to analyze logical arguments. However, Carroll was mainly interested in using logic diagrams as a pedagogical tool. In fact, he wrote a book called The Game of Logic which was intended to teach logic to children. His "game" consisted of a card with two diagrams, together with a set of counters, five grey and four red. The two diagrams were Carroll's version of a two-set and a three-set Venn diagram.

Although Carroll diagrams can be as simple as the first one above, the most well known type are those similar to the one below, where two attributes are shown. The 'universe' of a Carroll diagram is contained within the boxes in the diagram, as any number or object has to either have an attribute or not have it.

	y	not y
x	x and y	x , not y
not x	not x, y	not x, not y

	taste good	taste bad
fresh cakes	fresh tasty cakes	fresh bad tasting cakes
old cakes	old tasty cakes	old bad tasting cakes

Square Poems

I often wondered when I cursed,
Often feared where I would be
Wondered where she'd yield her love
When I yield, so will she.
I would her will be pitied!
Cursed be love! She pitied me...

This short poem was written by Lewis Carroll. There is something very unusual about this poem, This is an unusual form of writing, known as a square poem. Each line has 6 words, and there are 6 lines. You can read the lines horizontally, in the normal way. But you can also read down the columns, starting with column 1, and the poem will read exactly the same!
Obviously one could create the same effect using random words that made no sense. Carroll's triumph is that each line of the poem makes some sense, although it cannot maybe be described as great literature!

I	often	wondered	when	I	cursed
often	feared	where	I	would	be
wondered	where	she’d	yield	her	love
when	I	yeild	so	will	she
I	would	her	will	be	pitied
cursed	be	love!	she	pitied	me